REVISIONS			
REV	DESCRIPTION	DATE	APPROVED
01	INITIAL RELEASE	03/30/16	TAVA

SINGLE ENDED_COPLANAR STRIP

LAYER NO.	CONDUCTOR WIDTH	GROUND STRIP SEPARATION	REFERENCE LAYER	IMPEDANCE +/-10%
LAYER 1	31.496 MILS	6.845 MILS	2	50 OHM +/-10%

DRILL CHART: TOP to BOTTOM				
ALL UNITS ARE IN MILS				
FIGURE	SIZE	TOLERANCE	PLATED	QTY
◻	12.0	+3.0/-3.0	PLATED	736
◎	18.11	+3.0/-3.0	PLATED	4
•	27.99	+3.0/-3.0	PLATED	5
◈	40.0	+3.0/-3.0	PLATED	5
◎	40.157	+3.0/-3.0	PLATED	21
▲	41.339	+3.0/-3.0	PLATED	2
M	118.0	+2.0/-2.0	NON-PLATED	4
⬭	86.61x35.43	+3.0/-3.0	PLATED	2

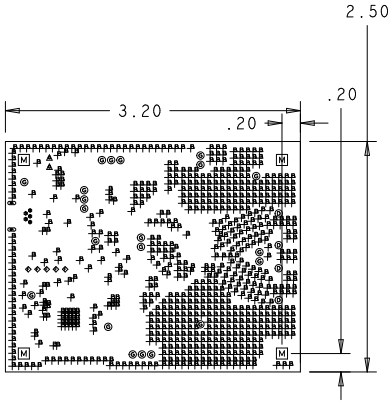

NOTES:(UNLESS OTHERWISE SPECIFIED)

1. RoHS COMPLIANT CERTIFICATION OR MATERIAL DECLARATION REQUIRED.
2. MATERIAL:
   A. IS410 OR EQUIVALENT. MATERIAL MUST CONFORM TO UL94V-0.
   B. REFER TO AS MENTIONED IN CROSS SECTION AREA IN THIS DOCUMENT.
   C. OVERALL METAL TO METAL THICKNESS AS SPECIFIED IN THE CROSS SECTION DRAWING IN THE DOCUMENT.
3. DRILLING:
   A. DIAMETERS IN DRILL TABLE ARE FINISHED HOLE SIZES +/-.003 tol.
      UNLESS OTHERWISE SPECIFIED IN DRILL TABLE.
   B. TEARDROP ALLOWED ON ENTRY OF VIA ON EVERY TRACE LAYER.
4. PLATING:
      COPPER PLATING IN THRU-HOLES .001 min.
5. MARKING:
   A. SILKSCREEN IN WHITE NON-CONDUCTIVE EPOXY INK ON PRIMARY SIDE OF THE
      BOARD OR BOTH SIDES IF APPLICABLE.
   B. FABRICATOR TO PLACE DATE CODE, LOGO AND RoHS COMPILANT SYMBOL IN SILKSCREEN ON SECONDARY SIDE.
6. FINAL FABRICATION:
   A. SOLDERMASK PRIMARY AND SECONDARY SIDE OF BOARD USING LIQUID PHOTOIMAGABLE
      MASK MATERIAL OVER BARE COPPER. PER IPC-SM-840. MASK ARTWORKS PROVIDED
      ARE 1:1. SOLDERMASK COLOR **GREEN**
7. FINISH:
   A. SHALL BE IMMERSION GOLD(ENIG).
   B. NICKEL THICKNESS: 0.00010-0.00020in
   C. GOLD THICKNESS: 0.0000030-0.000010in
8. BOARDS SHALL BE PURCHASED FROM UL RECOGNIZED VENDORS ONLY.
   FLAMABILITY RATING (94-V0).
9. MANUFACTURE BOARD TO BE IN ACCORDANCE WITH PERFORMANCE STANDARD
   IPC-6011/6012 CLASS 2 BOARD TO BE INSPECTED PER IPC-600-A CLASS 2.
10. MAXIMUM WARP OR TWIST SHALL NOT EXCEED .007 in/in.
11. TESTING:
   A. FABRICATOR TO ADD TEST STRUCTURES OR COUPONS AS NEEDED.
   B. T-LINE IMPEDENCE TO BE TESTED OR GUARANTEE WITHIN 10% IF SPECIFIED IN
      THE CROSS SECTION. TOLERANCE TO BE +/-10% UNLESS OTHERWISE SPECIFIED.

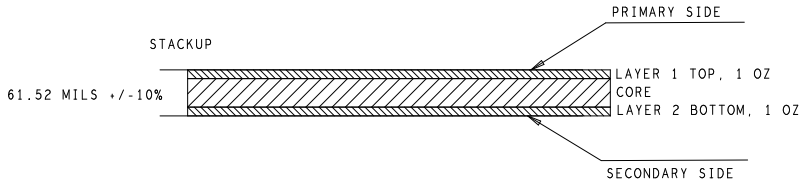

IMPEDANCE CONTROL ON 5MIL TRACE WIDTH AND 10MIL SPACIN (USB CONNECTOR CN1)

UNLESS OTHERWISE SPECIFIED	SIGNATURES	DATE
DIMENSIONS ARE IN INCHES	DRAWN XXXX	03/30/16
TOLERANCES ON: ANGLES +/- 2°	CHECKED TAVA	03/30/16
2 PL DECIMALS +/- .010	ENGRG TAVA	03/30/16
3 PL DECIMALS +/- .005	ISSUED	
THIRD ANGLE PROJECTIONS		

CYPRESS PROPIETARY
THIS DOUCUMENT CONTAINS CONFIDENTAL, PROPRIETARY INFORMATION THAT IS CYPRESS SEMICONDUCTOR PROPERTY. DO NOT DISCLOSE TO OR DUPLICATE FOR OTHERS EXCEPT AS AUTHIRIZED BY CYPRESS.

CYPRESS SEMICONDUCTOR
198 CHAMPION COURT
SAN JOSE, CA 95134
(408) 943-2600

FABRICATION DRAWING
CY3676 Evaluation Kit

SIZE	FSCM NO	DWG NO	REV
C		610-60302-01	01
SCALE: 1/1		SHEET: 1 OF 1	

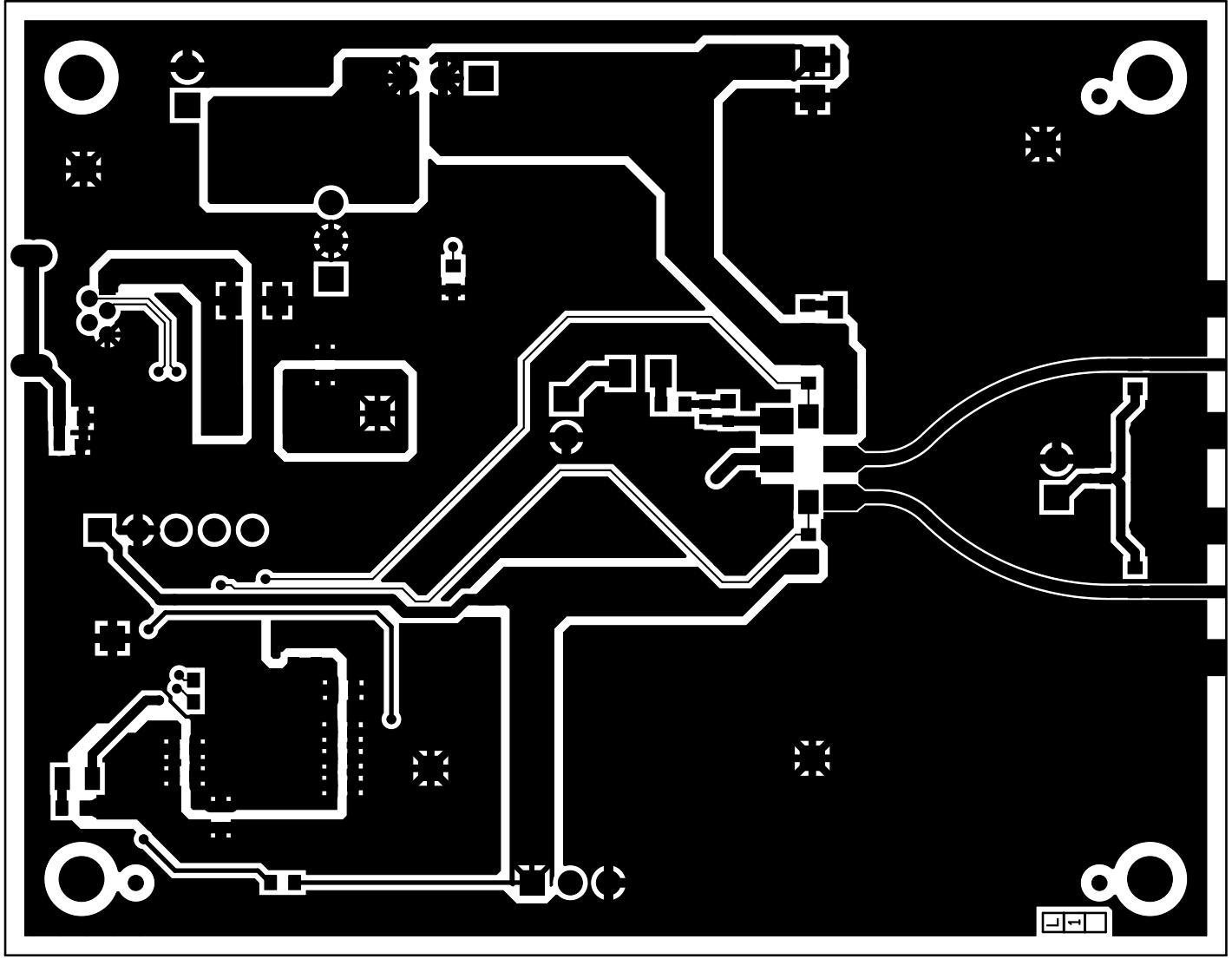

600-60328-01 REV01 PRIMARY SIDE

600-60328-01 REV01 SECONDARY SIDE

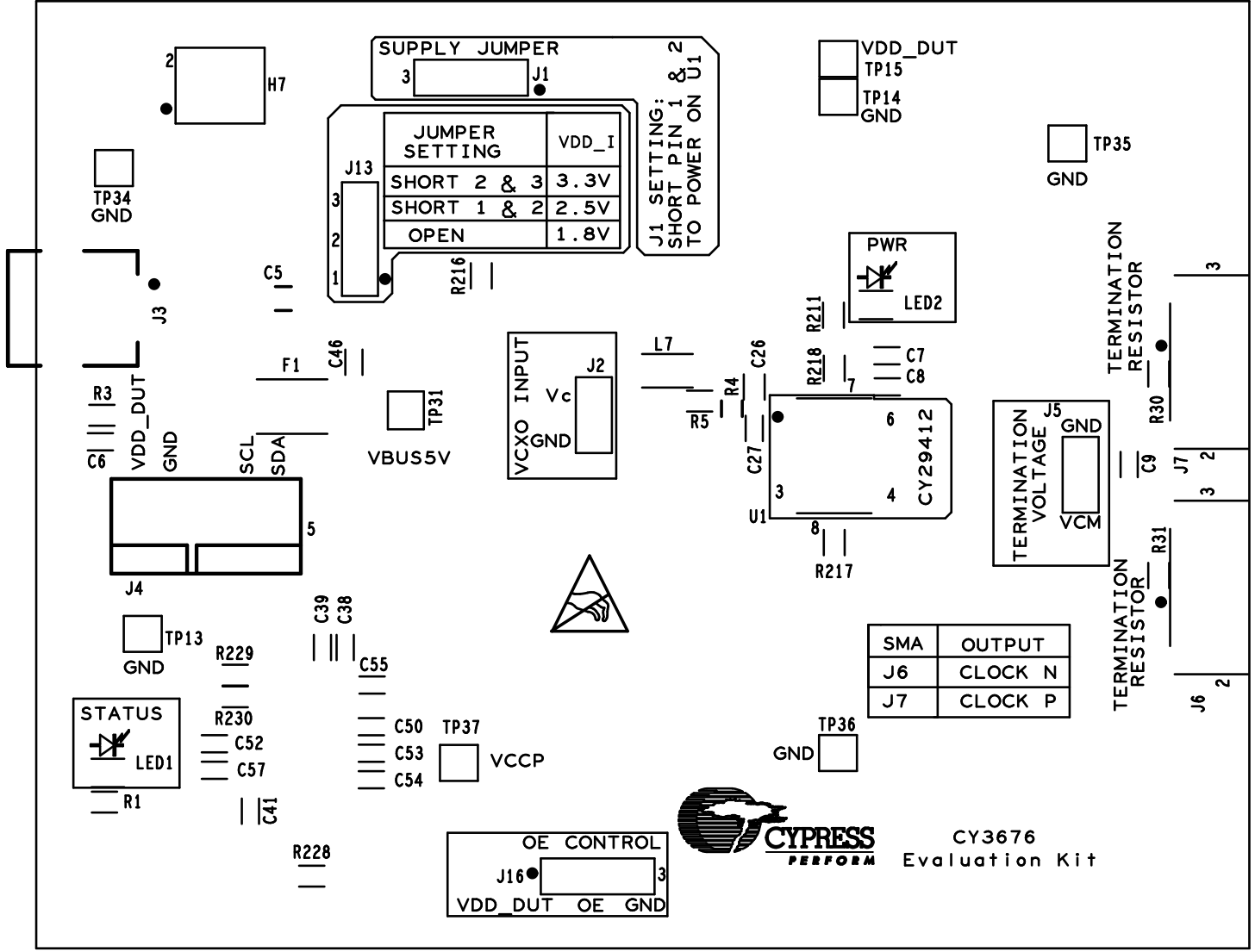

600-60328-01 REV01 PRIMARY SILKSCREEN

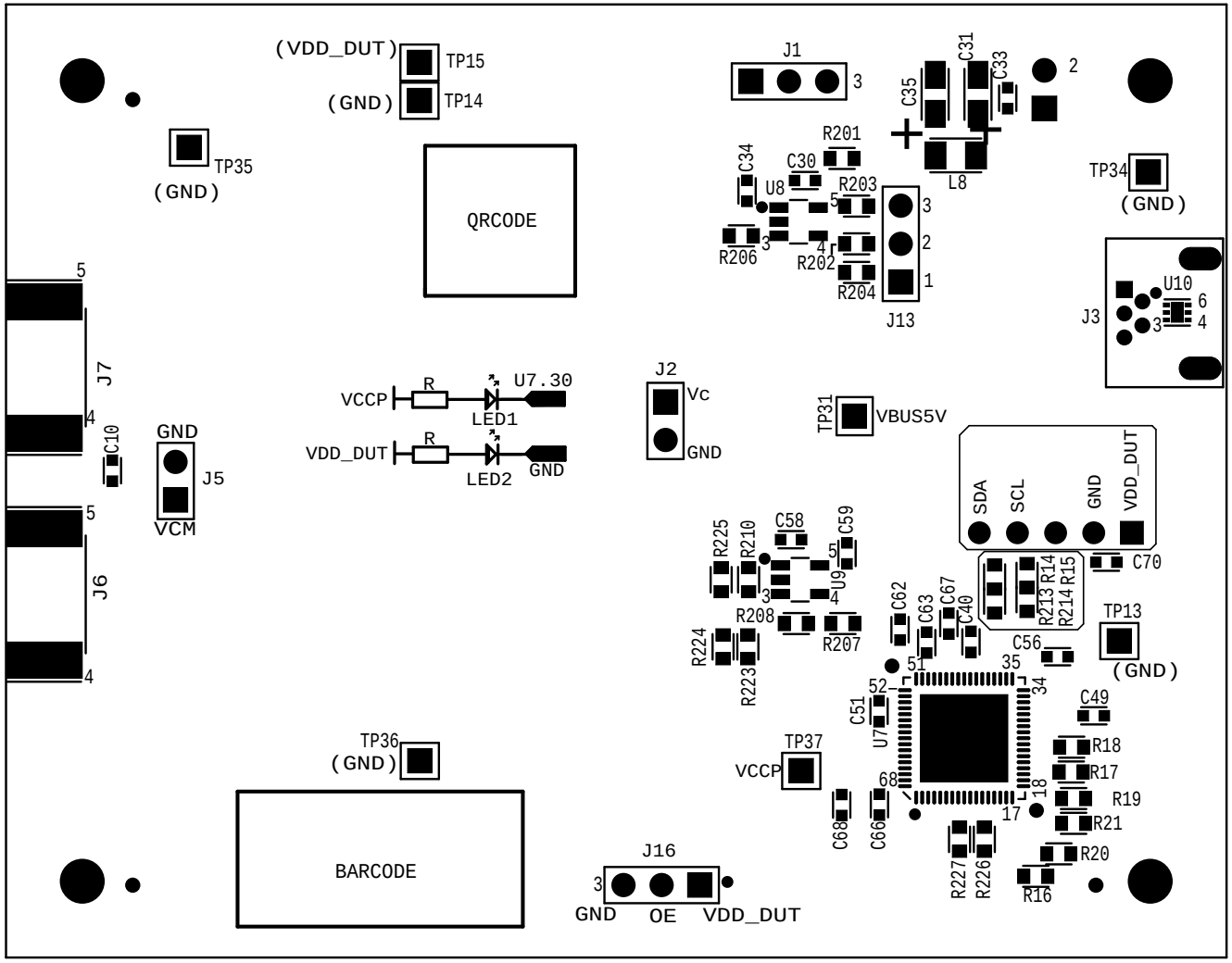

600-60328-01 REV01 SECONDARY SILKSCREEN